Southwest Washington Chapter of ICC

This construction detail is illustrative of the minimum standard
of construction based upon the 2009 IRC / WAC 51-51

Visit our web site at: www.sww-icc.org

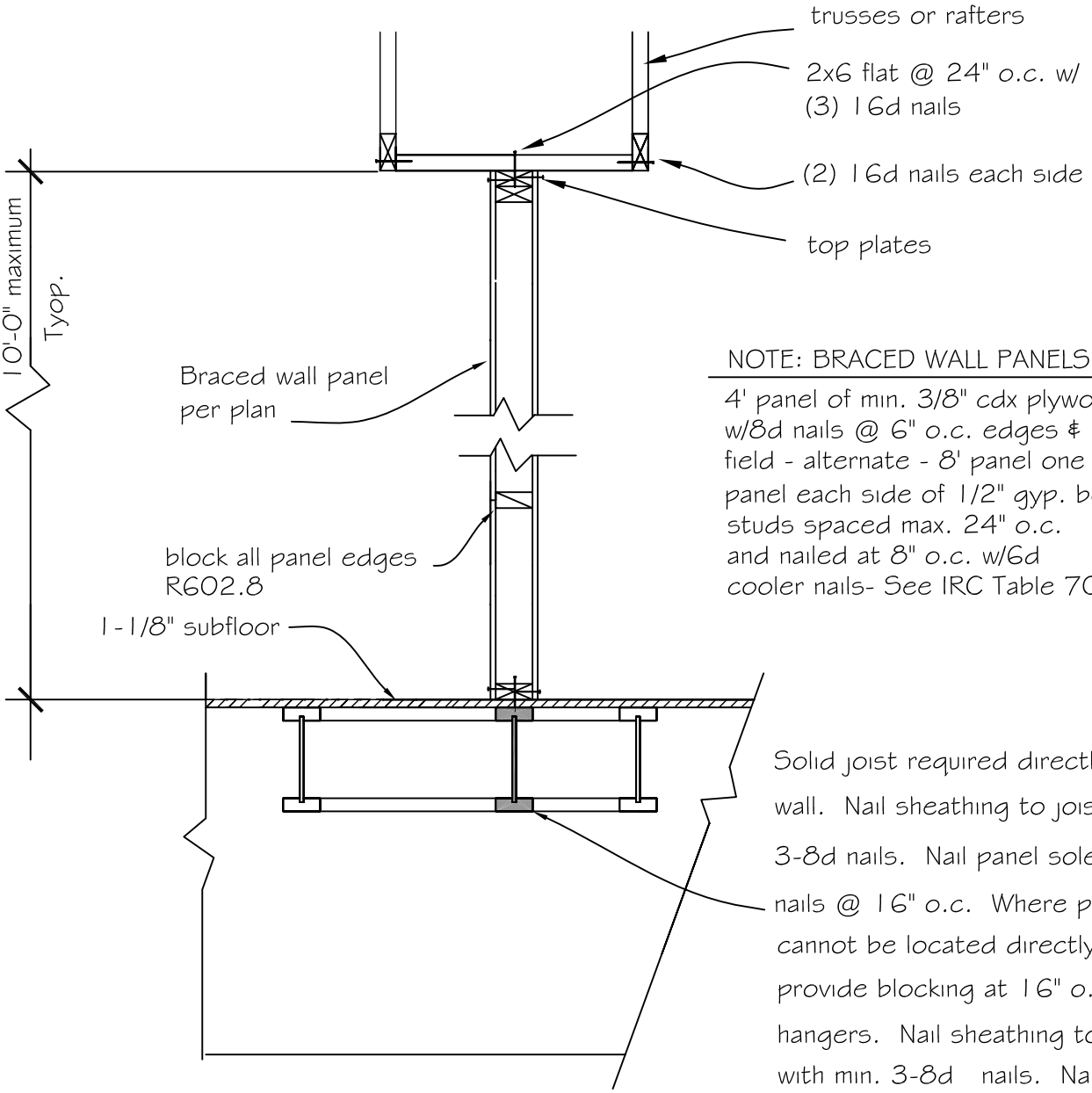

NOTE: BRACED WALL PANELS

4' panel of min. 3/8" cdx plywood w/8d nails @ 6" o.c. edges & 12" o.c. field - alternate - 8' panel one side or 4' panel each side of 1/2" gyp. board- studs spaced max. 24" o.c. and nailed at 8" o.c. w/6d cooler nails- See IRC Table 702.3.5

Solid joist required directly below braced wall. Nail sheathing to joists with min. 3-8d nails. Nail panel sole plate w/16d nails @ 16" o.c. Where parallel framing cannot be located directly below BP, provide blocking at 16" o.c. w/ approved hangers. Nail sheathing to each block with min. 3-8d nails. Nail sole plate w/3- 16d nails to blocking at 16" o.c. R602.10.6. &Table 602.3(1) line 1

Interior Braced Wall Panels

(w/joists or rafters parallel to panels)

Interior Braced Wall-48" DWG BY mlm Date 3-11-10 R602.10.1.4-4